ATEK
ANTRIEBSTECHNIK
Das Winkelgetriebe

NEW * NEW
NEW
NEW * NEW

BPCE

right angle-planetary gearbox

Quality gearboxes produced in Germany

As a medium-sized gear manufacturer, we can now look back on more than 75 years of tradition. For more than 30 years, everything has been "rotating" for us around right-angled power transmission. Then as now, we are driven by one thing: The solution to your engineering challenges. Technically competent, economical, reliable and fast.

With our comprehensive product range, developed and assembled in the metropolitan region of Hamburg and distributed all over the world, we have been able to secure a high and steadily growing market share.

The ATEK standard series are available on short delivery times. Whether you require special drive solutions for bespoke machines or standard products for general purposes: The ATEK modular system will meet your needs. Our customers benefit of sophisticated drive solutions, high product and process quality, with experienced knowledge and a competitive price/performance ratio.

www.atek.de

The new right angle planetary gearbox BPCE

The new ATEK right angle planetary gearbox BPCE combines the features of the well known, compact, spiral toothed and low noise ATEK bevel gears with those of a planetary gearbox.
The spiral bevel gear stage ensures quiet and compact power transmission in a right angle, the planetary gearbox offers high torques and high gear ratios in the narrowest space.

In addition, the combination impresses with strong torsional stiffness and low backlash. The motor flange of the right angle planetary gearbox is freely configurable and can be individually adapted to your motor.

For maximum flexibility, the right angle planetary gears are low-maintenance, lifetime-lubricated and optimized for mounting in all mounting positions. This gives you the best possible flexibility for the positioning in your application. Different sizes types and ratios are available for your application requirements.

The new economy gearbox design gives a very high price/performance ratio coupled with short delivery times.

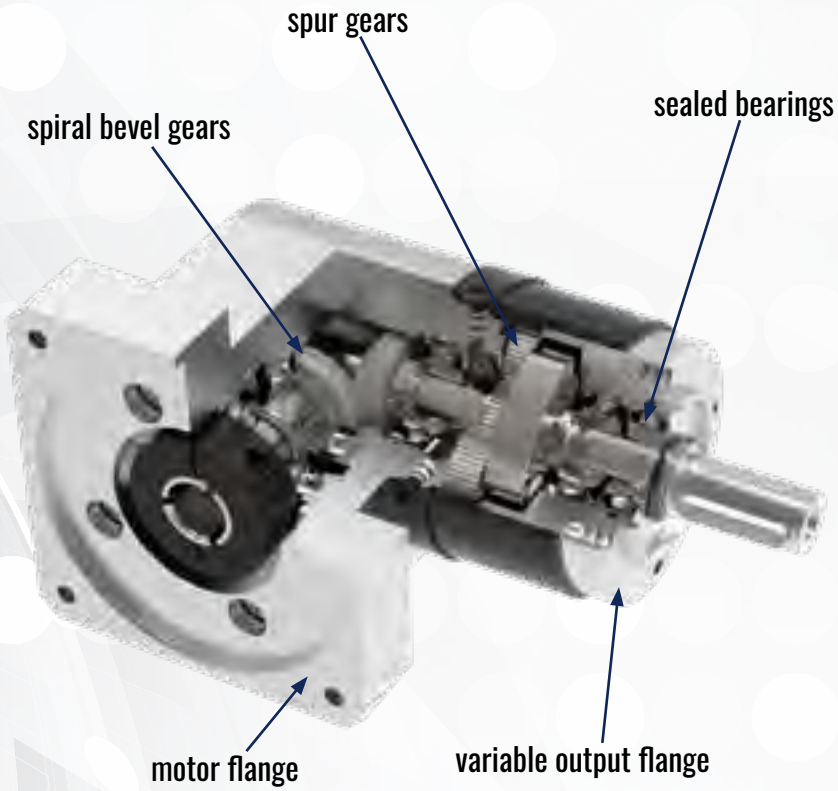

Product key

BPCE 060 005:1 COF

Type

B	Bevel gear
P	Planetary gear
C	Input: Flange for servo motor
E	Economy range

Construction types

CO	Output shaft
COQ	Output shaft, square flange
COP	Output shaft, reinforced
COF	robotflanged output

Size

	CO	COQ	COP	COF
	Nominal size per construction type - Frame Size			
040	40mm		50mm	
060	60mm	60mm	70mm	64mm
080	80mm	80mm	90mm	90mm
120	120mm	120mm	120mm	110mm

Ratio*

One stage PG	Two stages PG
3:1	9:1
4:1	12:1
5:1	15:1
7:1	16:1
10:1	20:1
	25:1
	28:1
	30:1
	35:1
	40:1
	50:1
	70:1
	100:1

*further ratios on request

Input shaft sizes

Size ➔	040		060		080	120
Maximum input shaft sizes➔	**8 mm**	**9 mm**	**11 mm**	**14 mm**	**19 mm**	**24 mm**
Acceptable input shaft sizes ↓						
4 mm	●					
5 mm	●		●			
6 mm	●		●			
6,35 mm	●		●	●		
7 mm		●	●			
8 mm	●		●	●	●	
9 mm		●	●	●	●	
9,5 mm			●	●	●	
9,525 mm			●	●	●	
10 mm				●	●	
11 mm			●	●	●	●
12 mm				●	●	●
12,7 mm				●	●	●
14 mm				●	●	●
15,875 mm					●	●
16 mm					●	●
19 mm					●	●
19,05 mm						●
20 mm						●
22 mm						●
24 mm						●

Please note: Reduction bushes will be used when motor shaft diameter is smaller than diameter shown.

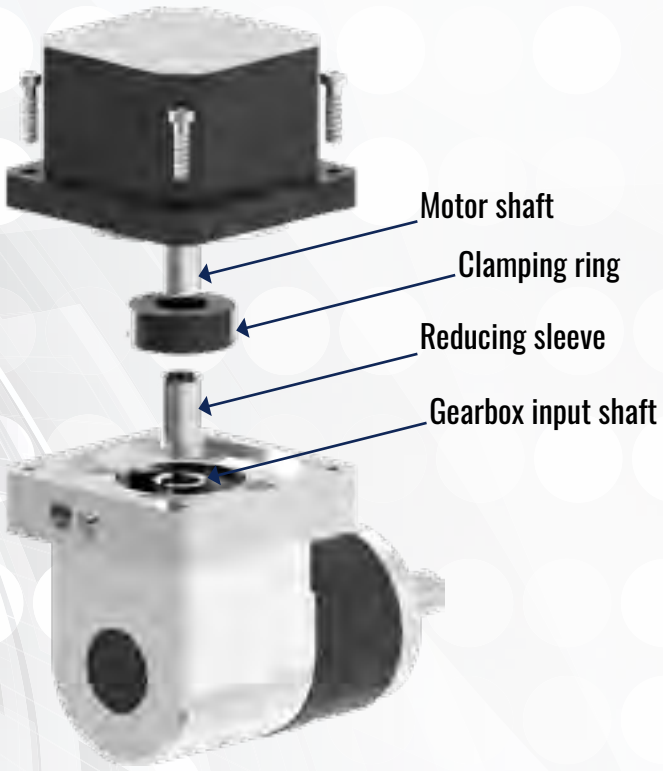

Construction types

CO type with output shaft

The new ATEK right angle planetary gearbox with output shaft features a very compact design.

COP type with output shaft, reinforced version

The new ATEK right angle planetary gearbox with reinforced output shaft and reinforced bearing allows higher radial and axial forces, with increased bendig moment compared to the CO version.

COQ type with square output flange

The new ATEK angle planetary gearbox with square output flange allowing for easier mounting.

COF design with robot flange and maximum torsional stiffness

The new ATEK right angle-planetary gearbox with compact flange output (robot flange). The standardized flange interface according to DIN makes it easy to mount for different applications and has a high torsional stiffness.

**The BPCE is easy to install, lifetime- lubricated and extremely low-noise due to the spiral toothing in the angle stage.
Version E combines all the advantages of our economy line.**

General technical performance data

Toothing of the planetary gear	Straight toothed
Toothing of the bevel gear	Spiral toothed
Number of planetary stages	1 or 2
Ratio – bevel gearbox	1:1
Ratio - planetary gearbox	3:1 to 100:1
Output shaft bearing	Deep groove ball bearing
Seal	2 RS- bearing seal
Lifetime (L 10h)	20.000 h
Operating temperature	-25 °C / +90 °C
Protection class	IP 54
Lubrication	Grease
Maintenance intervals	none, lifetime lubricated
Mounting position	All sides
Reference duty time	S1
Reference service factor	1
Reference environment temperature	+20 °C

Technical performance data of size 040

			1- stage					2- stage												
Ratio	**i**		**3**	**4**	**5**	**7**	**10**	**9**	**12**	**15**	**16**	**20**	**25**	**28**	**30**	**35**	**40**	**50**	**70**	**100**
Nominal output torque at n1 = 4000 [6]	T_{2N}	Nm	3	4	5	6,5	4,5	8	10	10	10	10	11	13	12	12	12	11	15	9
Max. acceleration torque at n1 = 4000 [1] [6]	T_{2B}	Nm	4,8	6,4	8	10,4	7,2	12,8	16	16	16	16	17,6	20,8	19,2	19,52	19,52	17,76	23,2	13,6
Emergency stop torque [2]	T_{2NOT}	Nm	9	12	15	19,5	13,5	24	30	30	30	30	33	39	36	36,6	36,6	33,3	43,5	25,5
Nominal input speed	n_1	min^{-1}	4000																	
Output torque at n2ref = 100 [5]	T_{2Nref}	Nm	4,5	6	7,5	8,5	5	16,5 [4]	20 [4]	18 [4]	20 [4]	20 [4]	18	20	16	20	18	18	18	13
Max. acceleration torque at n2ref = 100 [1] [5]	T_{2Bref}	Nm	7	10	12	14	8	26	32	29	32	32	29	32	26	32	29	29	29	21
Reference speed	n_{2ref}	min^{-1}	100																	
Backlash	j_t	arcmin	< 21					< 25												
Efficiency at full load	η	%	94					93												
max. speed	n_{1max}	min^{-1}	8000																	
Noise [3]	Qg	db(A)	<= 70																	

Preliminary data - changes possible

[1] maximum 1.000 cycles per hour. T_{2B}- Occurance < 5% per lifetime
[2] maximum 1.000 times per lifetime
[3] at 1m distance und nominal speed n1, without load, i=5
[4] Deviating lifetime: 10.000 h
[5] Toothing lifetime: 20.000 h
[6] Lifetime: 20.000 h

Type			**C0**	**C0P**	**C0Q**	**C0F**
permissible radial force	F_{r2}	N	200	588	-	-
permissible axial force	F_{a2}	N	200	800	-	-
Tilting moment	M_{K2}	Nm	5,5	14,9	-	-

Technical performance data of size 060

			1- stage					2- stage												
Ratio	**i**		**3**	**4**	**5**	**7**	**10**	**9**	**12**	**15**	**16**	**20**	**25**	**28**	**30**	**35**	**40**	**50**	**70**	**100**
Nominal output torque at n1 = 4000 [6]	T_{2N}	Nm	9	11	14	20	18	17	34	35	38	41	43	45	30	47	51	49	45	37
Max. acceleration torque at n1 = 4000 [1] [6]	T_{2B}	Nm	14	18	22	31	29	28	54	56	61	66	68	73	48	76	81	79	72	59
Emergency stop torque [2]	T_{2NOT}	Nm	26	33	42	59	54	52	102	105	115	123	128	136	90	142	152	148	136	110
Nominal input speed	n_1	min^{-1}	3000																	
Output torque at n2ref = 100 [5]	T_{2Nref}	Nm	12	16	20	25	15	36 [4]	44 [4]	44 [4]	44	44	40	44	36	44	40	44	44	35
Max. acceleration torque at n2ref = 100 [1] [5]	T_{2Bref}	Nm	19	26	32	40	24	58	70	70	70	70	64	70	58	70	64	70	70	56
Reference speed	n_{2ref}	min^{-1}	100																	
Backlash	j_t	arcmin	< 16					< 18												
Efficiency at full load	η	%	94					93												
max. speed	n_{1max}	min^{-1}	6000																	
Noise [3]	Qg	db(A)	<= 70																	

Preliminary data - changes possible

[1] maximum 1.000 cycles per hour. T_{2B}- Occurance < 5% per lifetime
[2] maximum 1.000 times per lifetime
[3] at 1m distance und nominal speed n1, without load, i=5
[4] Deviating lifetime: 10.000 h
[5] Toothing lifetime: 20.000 h
[6] Lifetime: 20.000 h

Type			**C0**	**C0P**	**C0Q**	**C0F**
permissible radial force	F_{r2}	N	419	1163	1163	636
permissible axial force	F_{a2}	N	500	1350	1350	1200
Tilting moment	M_{K2}	Nm	15	48	48	14

Technical performance data of size 080

			1- stage					2- stage												
Ratio	**i**		**3**	**4**	**5**	**7**	**10**	**9**	**12**	**15**	**16**	**20**	**25**	**28**	**30**	**35**	**40**	**50**	**70**	**100**
Nominal output torque at n1 = 3000 [6]	T_{2N}	Nm	17	23	29	41	36	47	60	63	66	71	72	77	45	73	78	74	68	66
Max. acceleration torque at n1 = 3000 [1] [6]	T_{2B}	Nm	27	37	46	66	58	75	96	101	106	113	115	123	72	117	125	118	109	106
Emergency stop torque [2]	T_{2NOT}	Nm	51	69	87	123	109	141	180	189	199	212	215	231	135	219	234	222	204	198
Nominal input speed	n_1	min^{-1}	3000																	
Output torque at n2ref = 100 [5]	T_{2Nref}	Nm	30 [4]	40	50	65	38	87 [4]	95 [4]	86	76	76	71	76	86	72	76	72	65	43
Max. acceleration torque at n2ref = 100 [1] [5]	T_{2Bref}	Nm	48	64	80	104	60,8	139,2	152	137,6	121,6	121,6	114	122	138	115	122	115	104	69
Reference speed	n_{2ref}	min^{-1}	100																	
Backlash	j_t	arcmin	< 13					< 15												
Efficiency at full load	η	%	94					93												
max. speed	n_{1max}	min^{-1}	6000																	
Noise [3]	Qg	db(A)	<= 73																	

Preliminary data - changes possible

Type			**CO**	**COP**	**COQ**	**COF**
permissible radial force	F_{r2}	N	732	1315	1888	1958
permissible axial force	F_{a2}	N	1000	2000	2500	2990
Tilting moment	M_{K2}	Nm	30	63	92	53

[1] maximum 1.000 cycles per hour. T_{2B}- Occurance < 5% per lifetime
[2] maximum 1.000 times per lifetime
[3] at 1m distance und nominal speed n1, without load, i=5
[4] Deviating lifetime: 10.000 h
[5] Toothing lifetime: 20.000 h
[6] Lifetime: 20.000 h

Technical performance data of size 120

			1- stage					2- stage												
Ratio	**i**		**3**	**4**	**5**	**7**	**10**	**9**	**12**	**15**	**16**	**20**	**25**	**28**	**30**	**35**	**40**	**50**	**70**	**100**
Nominal output torque at n1 = 2600 [6]	T_{2N}	Nm	41	54	68	95	80	120	162	183	196	163	156	166	226	145	205	195	172	123
Max. acceleration torque at n1 = 2600 [1] [6]	T_{2B}	Nm	66	86	109	152	128	192	259	293	314	261	249	266	361	232	328	312	275	197
Emergency torque [2]	T_{2NOT}	Nm	123	162	204	285	240	360	486	549	588	489	467	498	677	435	615	585	516	369
Nominal input speed	n_1	min^{-1}	2600																	
Output torque bei n2ref = 100 [5]	T_{2Nref}	Nm	60	80	100	135	95	180	200	188	200	200	188	164	220	164	200	188	164	94
Max. acceleration torque at n2ref = 100 [1] [5]	T_{2Bref}	Nm	96	128	160	216	152	288	320	300,8	320	320	301	262	352	262	320	301	262	150
Reference speed	n_{2ref}	min^{-1}	100																	
Backlash	j_t	arcmin	< 13					< 15												
Efficiency at full load	η	%	94					93												
max. speed	n_{1max}	min^{-1}	4800																	
Noise [3]	Qg	db(A)	<= 75																	

Preliminary data - changes possible

[1] maximum 1.000 cycles per hour. T_{2B}- Occurance < 5% per lifetime
[2] maximum 1.000 times per lifetime
[3] at 1m distance und nominal speed n1, without load, i=5
[4] Deviating lifetime: 10.000 h
[5] Toothing lifetime: 20.000 h
[6] Lifetime: 20.000 h

Type			**C0**	**C0P**	**C0Q**	**C0F**
permissible radial force	F_{r2}	N	1890	2714	2440	2400
permissible axial force	F_{a2}	N	2500	4000	2500	3300
Tilting moment	M_{K2}	Nm	108	180	109	109

Dimensions CO
(single stage planetary gear)

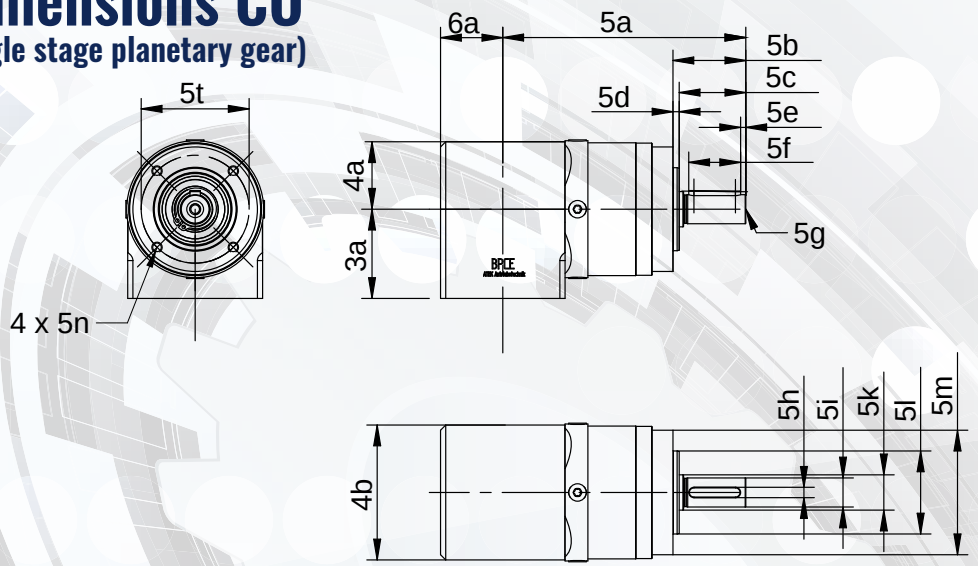

Dimensions COP
(single stage planetary gear)

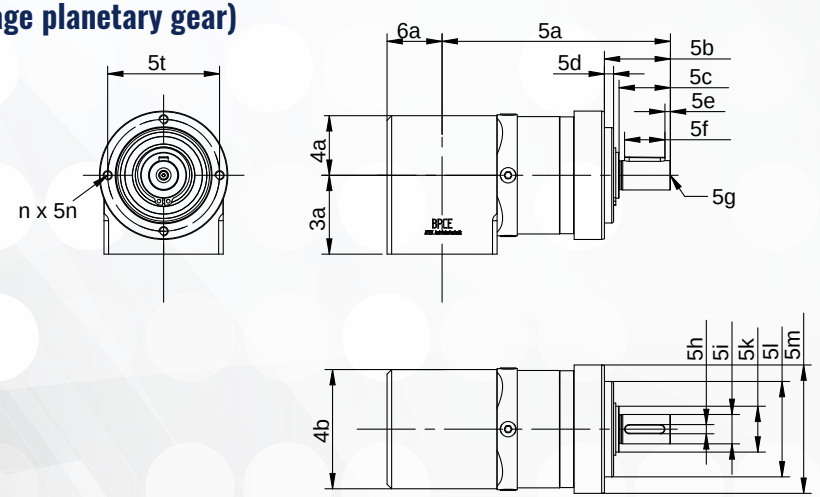

BA	BG	3a	4a	4b	5a	5b	5c	5d	5e	5f	5g	5h	5i	5k	5l	5m	5n	5t	5p	5q	5r	5s	6a
CO	040	30,0	20,0	40,0	87,5	26,0	18,0	2,0	2,5	18,0	M3x9	3,0	10h7	12,0	26h7	40,0	M4x7	34,0					20,0
	060	43,0	32,5	65,0	117,1	35,0	30,0	3,0	2,5	25,0	M5x12	5,0	14h7	17,0	40h7	60,0	M5x8	52,0					30,0
	080	54,0	40,0	80,0	142,0	40,0	36,0	3,0	2,0	32,0	M6x16	6,0	20h7	25,0	60h7	80,0	M6x10	70,0					40,0
	120	70,0	60,0	120,0	177,0	55,0	50,0	4,0	5,0	40,0	M10x22	8,0	25h7	35,0	80h7	115,0	M10x16	100,0					57,5
COP	040	30,0	20,0	40,0	89,5	24,5	18,0	3,0	2,0	18,0	M4x10	4,0	12h7	15,0	35h7	50,0	M4x7	44,0					20,0
	060	43,0	32,5	65,0	124,5	36,0	28,0	3,0	2,0	25,0	M5x12	5,0	16h7	30,0	52h7	70,0	M5x8	62,0					30,0
	080	54,0	40,0	80,0	150,5	46,0	36,0	4,0	2,0	32,0	M8x19	6,0	22h7	35,0	68h7	90,0	M6x10	80,0					40,0
	120	70,0	60,0	120,0	186,0	68,0	58,0	5,0	4,0	50,0	M12x28	10,0	32h7	50,0	90h7	120,0	M8x20	108,0					57,5

Preliminary data - changes possible

Dimensions in mm

Dimensions COF
(single stage planetary gear)

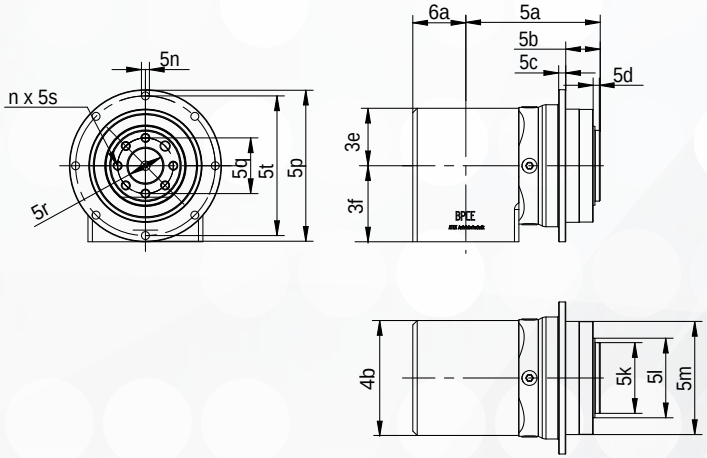

Dimensions COQ
(single stage planetary gear)

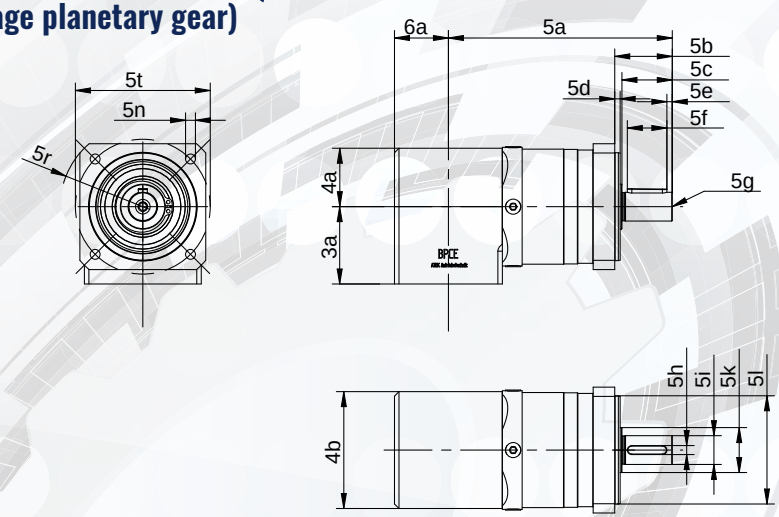

BA	BG	3a	4a	4b	5a	5b	5c	5d	5e	5f	5g	5h	5i	5k	5l	5m	5n	5t	5p	5q	5r	5s	6a
COF	040	-	-		-	-	-	-	-	-	-	-	-	-	-	-	-	-	-	-	-	-	-
	060	43,0	32,5	65,0	76,0	19,5	4,0	4,0						40h7		64,0	D4,5	79,0	86,0	31,5	20,0	M5x7	30,0
	080	54,0	40,0	80,0	107,5	30,0	7,0	6,0						63h7		90,0	D5,5	109,0	118,0	50,0	31,5	M6x10	40,0
	120	70,0	60,0	120,0	139,0	29,0	8,0	6,0						80h7		110,0	D5,5	135,0	145,0	63,0	40,0	M6x12	57,5
COQ	040	-	-	-	-	-	-	-	-	-	-	-	-	-	-	-	-	-	-	-	-	-	-
	060	43,0	32,5	65,0	124,5	32,0	28,0	3,0	4,0	20,0	M5x12	5,0	16h7	20,0	60h7		D5,5	75,0			46,0		30,0
	080	54,0	40,0	80,0	152,0	40,0	36,0	3,0	4,0	28,0	M6x16	6,0	20h7	35,0	80h7		D6,5	100,0			58,0		40,0
	120	70,0	60,0	120,0	186,0	55,0	50,0	4,0	5,0	40,0	M10x22	8,0	25h7	35,0	110h7	D8,5	130,0			72,5		57,5	57,5

Preliminary data - changes possible

Dimensions in mm

ATEK worldwide representatives

Distributors are available all over the world. Please don not hesitate to contact us for further information.

email: olaf.hingst@atek.de
tel: +49 (0)4101 7953 - 13

Olaf Hingst - International Sales Director

Quality and know-how down to the smallest detail.

ATEK
ANTRIEBSTECHNIK
Das Winkelgetriebe

ATEK Antriebstechnik Willi Glapiak GmbH
Siemensstrasse 47 • D-25462 Rellingen
Tel.: +49 - (0)4101 7953-0
E-Mail: atek@atek.de • Web: www.atek.de

Sales Dept.
Tel.: +49 - (0)4101 7953- 38 / -13
Fax: +49 - (0)4101 7953-21
E-Mail: sales@atek.de

Purchase Dept.
Tel.: +49 - (0)4101 7953-11
Fax: +49 - (0)4101 7953-21
E-Mail: purchase@atek.de